ESP32 Microcontroller Power Supply

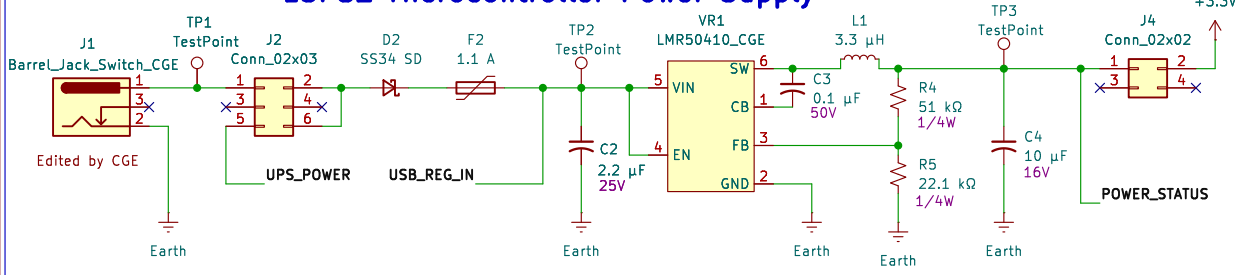

Power supply accepts a 9–12V input from either a barrel jack external header (J2) and regulates it down to a 3.3V for the ESP32 and associated circuitry.

8–Pin Header (Team Connector)

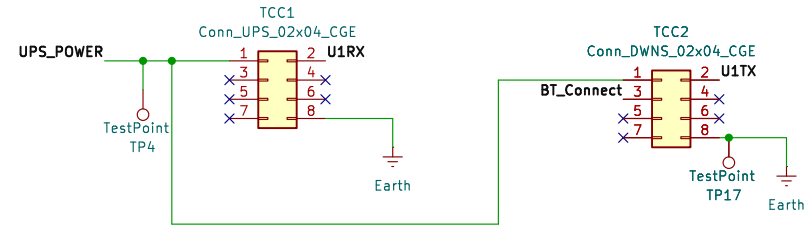

The 8–pin team connectors provide power and communication interfacing between the ESP32 board and the HMI subsystem, supporting both upstream power input and downstream signal distribution.

ESP32–S3 Microcontroller Module

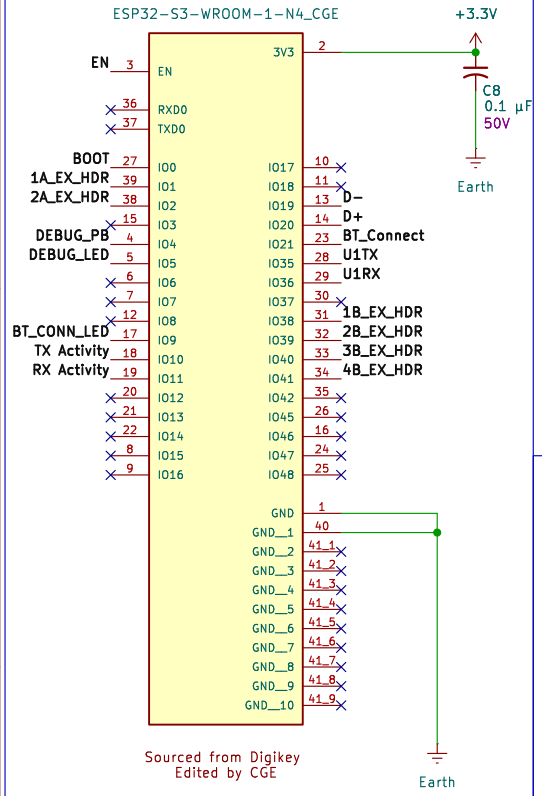

USB 2.0 Device Interface

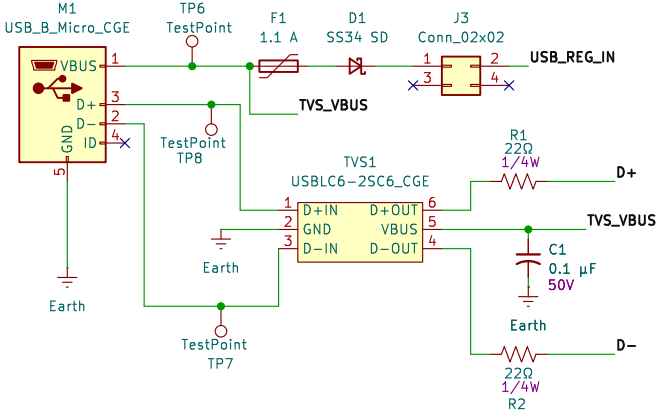

The USB 2.0 Micro–B interface provides 5V power input and USB data connectivity to the ESP32, with integrated overcurrent protection, reverse protection, and ESD suppression.

LED Status

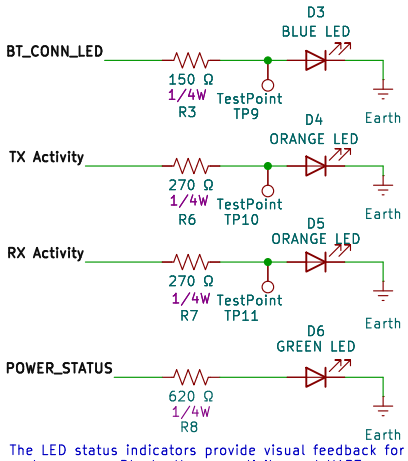

The LED status indicators provide visual feedback for system power, Bluetooth connectivity, and UART communication activity.

Debug Interface

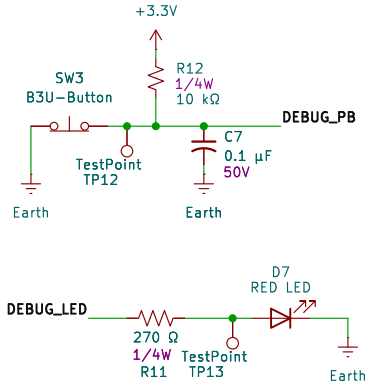

Debug Interface:
User pushbutton (active LOW) and red LED for firmware debugging and state indication.

Reset & Boot Configuration

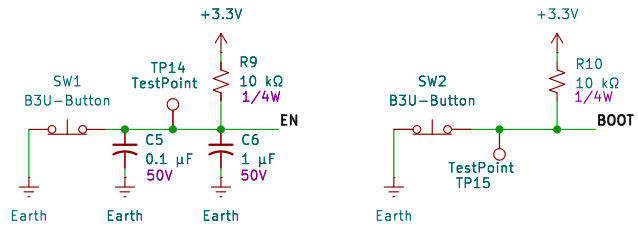

EN:
10k pull–up to 3.3V; pushbutton to GND for reset; 0.1µF to GND for RC filtering.

BOOT:
10k pull–up to 3.3V; pushbutton to GND to enter download mode during reset.

Spare Headers

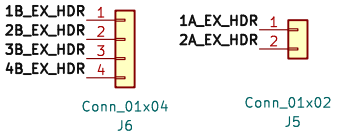

General Notes for Subsystem Schematic Design: Wireless Communication

– The ESP32 functions as a Bluetooth gateway, bridging wireless Rover communication to the HMI through UART.

Sheet: /
File: Wireless Communication Subsystem V1.kicad_sch

Title: Wireless Communication Subsystem– Cristopher G E

Size: A4	Date: 2026–02–20	Rev: 1.0
KiCad E.D.A. 9.0.4		Id: 1/1